TRADITIONAL WHEEL PULLDOWN FAUCET / 4PC. SUITE

5100-4

- **Max Counter Thickness 2-3/8"**
- **Minimum Install Hole Size 1-1/2"**

A. Supply Hoses - 20" Long with 3/8" Compression Fittings

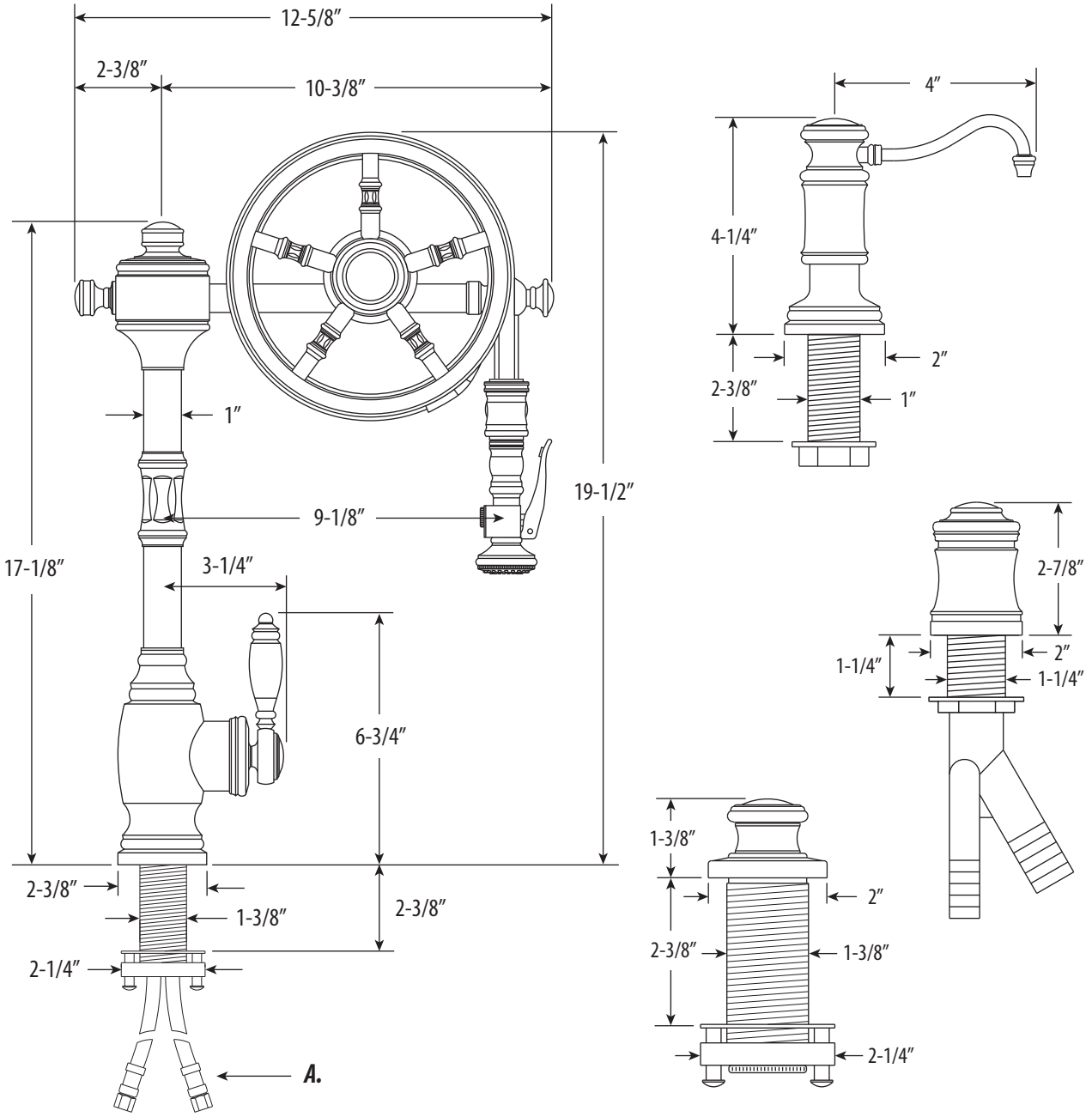

ECO BRASS®
HIGH PERFORMANCE LEAD FREE BRASS

DIMENSIONS MAY VARY AND ARE SUBJECT TO CHANGE. NO RESPONSIBILITY IS ASSUMED FOR USE OF SUPERCEDED OR VOIDED DATA